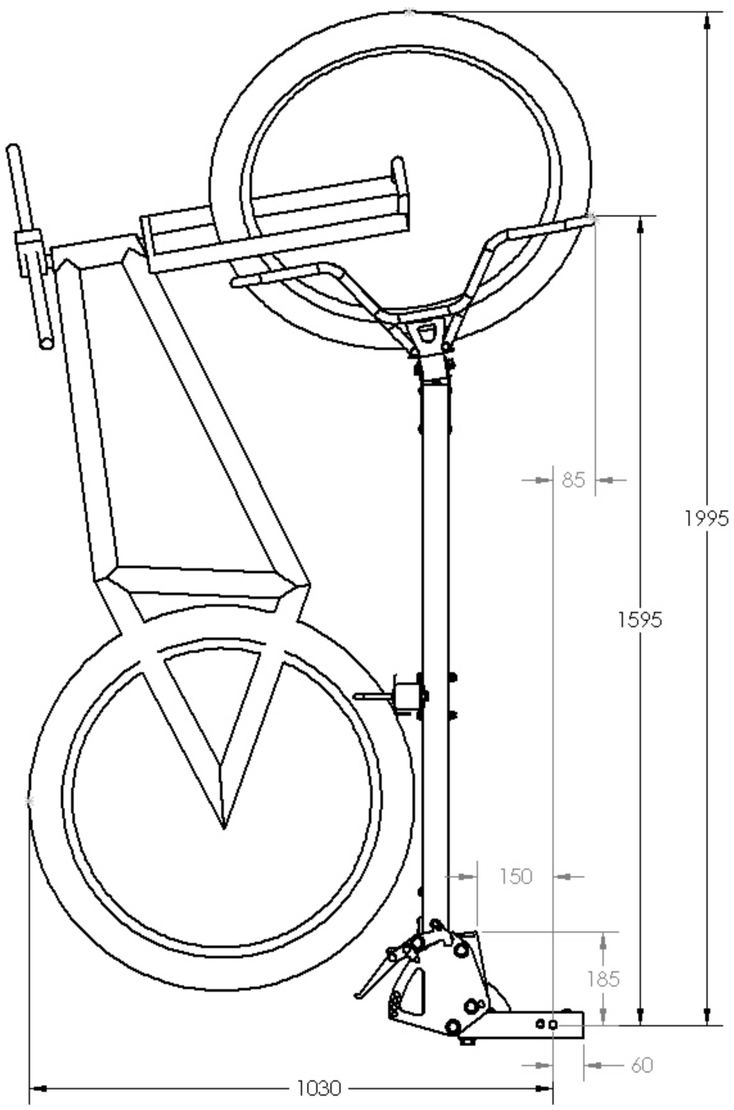

SINGLE TRAIL SL100 AND SL150 0 DEG LOCKED

© COPYRIGHT IS OWNED BY CURRIE ENGINEERING. CREATED 1/7/15.
THIS DOCUMENT IS CONFIDENTIAL. REPRODUCTION, DISCLOSURE OR USE OF
THIS DOCUMENT IS STRICTLY PROHIBITED WITHOUT WRITTEN PERMISSION OF
CURRIE ENGINEERING. ABN 98 129 128 035. WALLACE, VICTORIA, AUSTRALIA, 3352

Currie Engineering

UNLESS OTHERWISE SPECIFIED:
DIMENSIONS ARE IN MILLIMETERS
SURFACE FINISH:
TOLERANCES:
LINEAR:
ANGULAR:

DWG NO.
SL RACK
A3
SCALE:1:10
SHEET 1 OF 1